INSTALLATION INSTRUCTION

POP-IN 4" Remote Driver

R4DRDR2,R4DRDN2,R4DSDR2,R4DSDN2

SAFETY INSTRUCTION

IMPORTANT: NEVER attempt any work without shutting off the electricity.

- Read all instructions before installing.
- System is intended for installation by a qualified electrician in accordance with the National Electrical Code and local regulations.
- Go to the main fuse box, or circuit breaker. Place the main power switch in the "OFF" position and unscrew the fuse(s) or switch "OFF" the circuit breaker switch(es) that control the power to the fixture or room that you are working on.
- Place the wall switch in the "OFF" position.

AVERTISSEMENT

IMPORTANT : Coupez l'électricité avant TOUTE manipulation.

- Lisez toutes les instructions avant d'installer.
- Système est destiné à être installé par un électricien qualifié en onformité avec le code national de l'électricité et les règlements locaux.
- Accédez au panneau central de disjoncteurs ou de fusibles de votre demeure et placez l'interrupteur principal en position d'arrêt (« OFF »).
- Placez l'interrupteur mural en position d'arrêt (« OFF »).

CAUTION

All parts must be used as indicated in these instructions. Do not substitute any parts, leave parts out, or use any parts that are worn out or broken. Failure to follow could invalidate the ETL/cETL listing of this fixture.

NEW CONSTRUCTION OVERALL DIMENSIONS

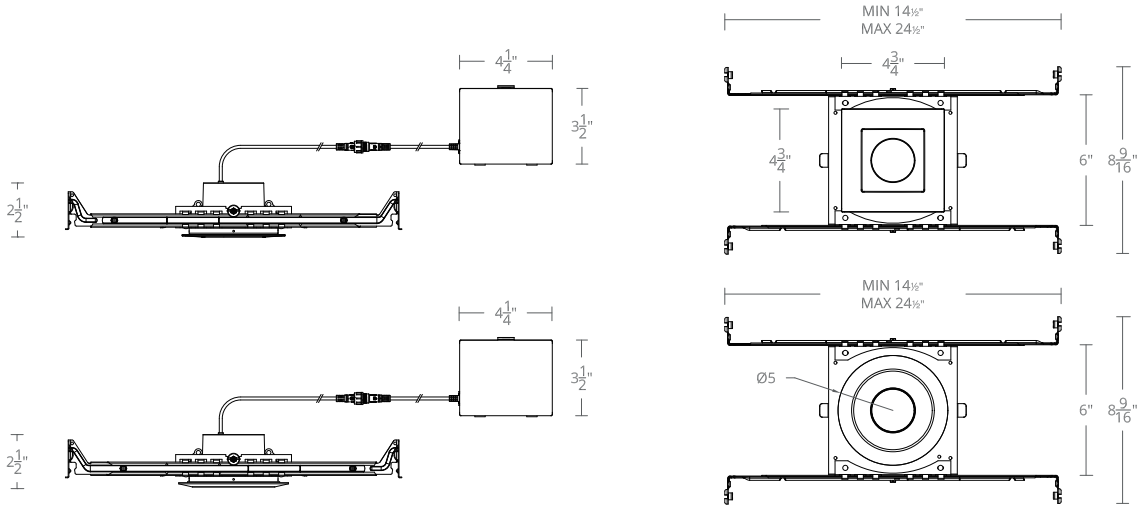

REMODEL OVERALL DIMENSIONS

SPECIFICATIONS	
Input:	120-277V
Installation:	IC for all models (12W)
Dimming:	ELV / TRIAC

waclighting.com
Phone (800) 526.2588
Fax (800) 526.2585

Headquarters, East Manufacturing Facility
44 Harbor Park Drive
Port Washington, NY 11050

South East Manufacturing Facility
1600 Distribution Ct
Lithia Springs, GA 30122

Central Manufacturing Facility
1700 South J Elmer Freeway, Ste 100
Cedar Hill, TX 75104

West Manufacturing Facility
1750 S Archibald Ave
Ontario, CA 91761

WAC Lighting retains the right to modify the design of our products at any time as part of the company's continuous improvement program. May, 2025

INSTALLATION INSTRUCTION

POP-IN 4" Remote Driver

R4DRDR2,R4DRDN2,R4DSDR2,R4DSDN2

WAC

REMODEL INSTALLATION

1. At the point of installation, cut a Ø4" round hole for a round trim (See **FIG. 2**).
2. Ceiling thickness range is ½" to 1½".
3. Take out fixture from packaging box.
4. Adjust to desired color temperature using switch in the junction box of the fixture. (See **FIG. 1**).
5. Pull building supply wires through the ceiling cutout and open fixture junction box door. (See **FIG. 3**) Remove desired housing knockout and feed building wires into housing using appropriate connector.
6. Connect fixture wires to building wires (See **FIG. 4**):
   Connect each supply wire with appropriate junction box wire connector. This fixture features electronic low voltage (ELV) or TRIAC dimming capabilities.

   To utilize ELV or TRIAC, wire black (line hot), white (line neutral) and green (ground) in accordance to dimmer specifications.

   When not using a dimmer, connect black fixture wire to hot, white fixture wire to neutral and green fixture wire to ground. Leave all other wires capped individually.

FIG. 1

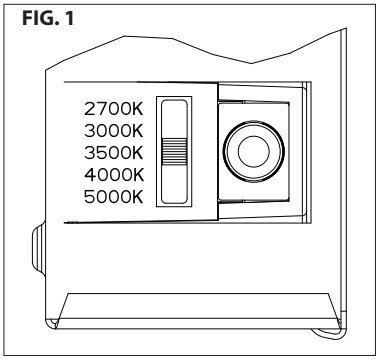

FIG. 2

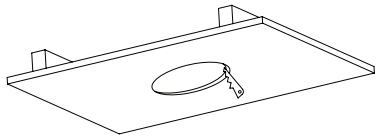

ROUND: CUT OUT Ø4"

FIG. 3

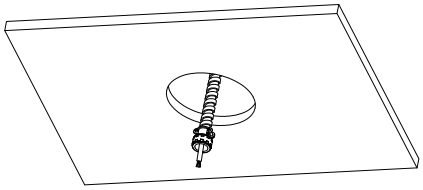

FIG. 4

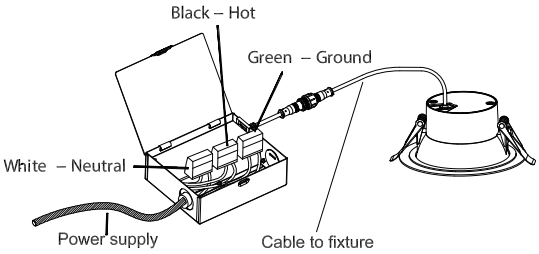

7. Place all wiring and connectors back in junction box and replace the junction box's cover.
8. Fold trim assembly mounting springs inward and insert trim assembly into ceiling cutout. Be sure once installed, trim assembly is flush and secure (See **FIG. 5** & **6**).

FIG. 5

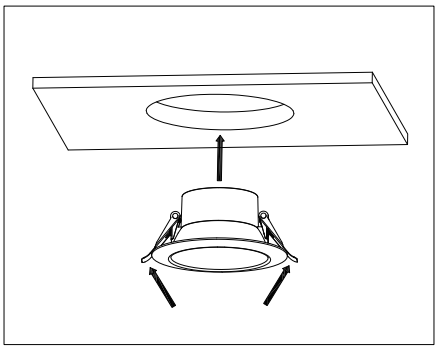

FIG. 6

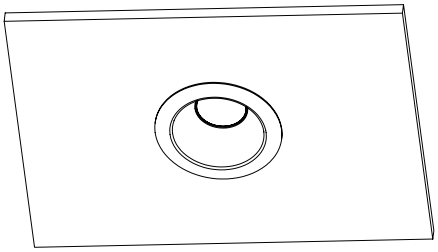

waclighting.com
Phone (800) 526.2588
Fax (800) 526.2585

Headquarters, East Manufacturing Facility
44 Harbor Park Drive
Port Washington, NY 11050

South East Manufacturing Facility
1600 Distribution Ct
Lithia Springs, GA 30122

Central Manufacturing Facility
1700 South J Elmer Freeway, Ste 100
Cedar Hill, TX 75104

West Manufacturing Facility
1750 S Archibald Ave
Ontario, CA 91761

WAC Lighting retains the right to modify the design of our products at any time as part of the company's continuous improvement program. May, 2025

NEW CONSTRUCTION INSTALLATION

1. Install mounting frame using two hanger bars (24½" max). Bars are notched on the ends to fit over "T" bars in suspended ceilings (See **FIG. 8A**).

2. Hanger bars include a captive mounting "screw-nail" for ease of installation (See **FIG. 7**).
   Align the bottom of the hanger bar with the bottom of the wood joist. Secure the "screw-nail" on each end by screwdriver (See **FIG. 8B**), or by hammer (See **FIG. 8C**).

3. Slide fixture along bar hangers into desired location. Use locking screws to secure (See **FIG. 8D**).

4. To shorten hanger bars to fit in a 12 joist, snap off one section of the hanger bars (See **FIG. 9**).

5. Cut a 4 1/8" diameter hole in the ceiling at the point of installation and install ceiling.

6. Adjust to desired color temperature using switch in the junction box of the fixture. (See **FIG. 1**).

7. Pull building supply wires through ceiling cutout and open fixture junction box door.
   Remove desired housing knockout and feed building wires into housing using appropriate connector.

FIG. 7

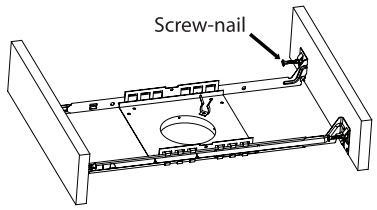

FIG. 8

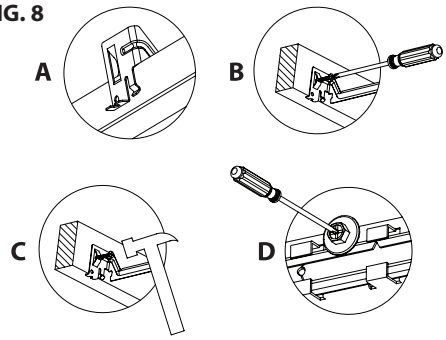

FIG. 9

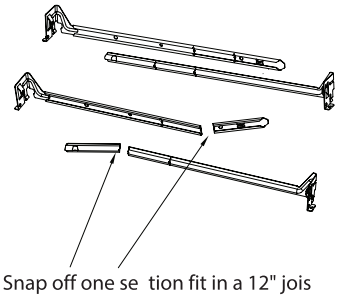

8. Connect fixture wires to building wires (See **FIG. 10**):
   Connect each supply wire with appropriate junction box connector. This fixture features electronic low voltage (ELV) or TRIAC dimming capabilities.

   To utilize ELV or TRIAC, wire black (line hot), white (line neutral) and green (ground) in accordance to dimmer specifications.

   When not using a dimmer, connect black fixture wire to hot, white fixture wire to neutral and green fixture wire to ground. Leave all other wires capped individually.

9. Place all wiring and connectors back in junction box and replace the junction box's cover.

FIG. 10

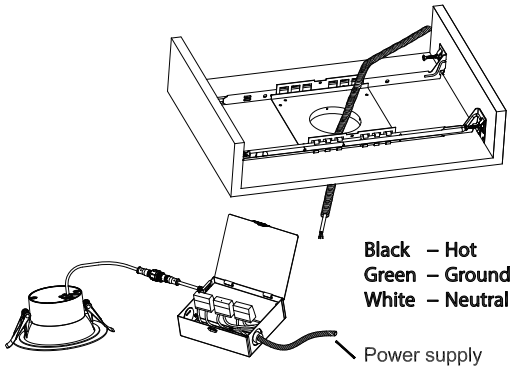

10. Fold trim assembly mounting springs inward and insert trim assembly into ceiling cutout. Be sure once installed, trim assembly is flush and secure (See **FIG. 5** & **6**).